Reg. No. [ ] [ ] [ ] [ ] [ ] [ ] [ ] [ ] [ ] [ ] [20ME32]

THIRD SEMESTER B.Tech EXAMINATION, DECEMBER–2021

ENGINEERING MECHANICS

Time: 3 Hours **Maximum Marks: 70**

Instructions:
i. Answer **FIVE** full Questions. Question number 1 and 2 are compulsory. Each question carries 14 marks.
ii. Missing data may be suitably assumed.

1. a. State and explain the following with suitable examples:

i. Varignon's Theorem

ii. Principle of Transmissibility **08**

iii. Parallelogram law of forces

iv. Principle of superposition

b. Replace the forces acting on the pipe as shown in the figure 1b by an equivalent single force and couple system acting at point A **06**

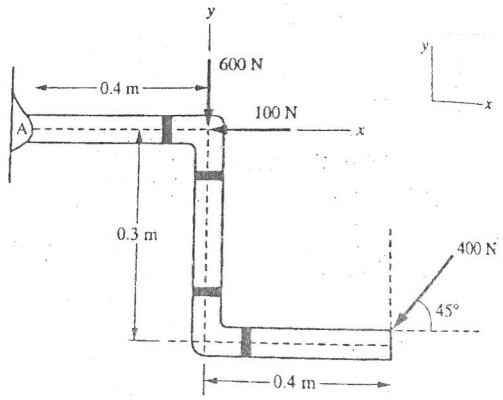

Fig. 1b

2. a. Define the following terms and explain their importance with suitable example **06**

i. Shear stress and shear strain

ii. Hooke's Law

iii. Poisson's Ratio

b. Three bars made of copper, zinc and aluminium shown in figure 2b are of equal length and have a cross section of 500, 750 and 1000 mm^2 respectively. They are rigidly connected at their ends. If this compound member is subjected to a longitudinal pull of 250 kN, estimate the load and stress experienced by each member. Consider the value of E for copper as 130 GPa, E for zinc as 100 GPa and aluminium as 80 GPa **08**

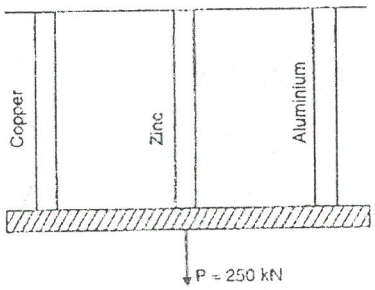

Fig. 2b

3. a. State the assumptions of simple theory of bending for beams. Derive the flexure formula for the beam. **08**

b. A cantilever beam carrying the point loads is shown in the figure 3b. Construct the shear force and bending moment diagram for the given beam **06**

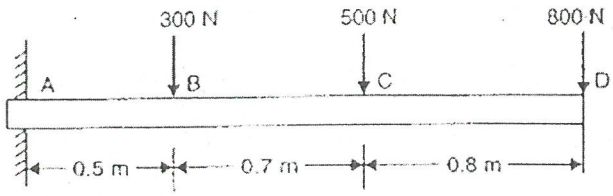

Fig. 3b

OR

4. a. Construct the shear force and bending moment diagram for the beam shown in figure 4a and highlight the salient points **08**

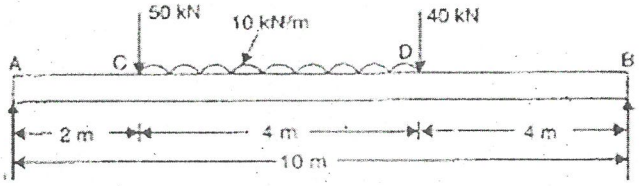

Fig. 4a

b. A cantilever beam of length 2 meters fails when a load of 2 kN is applied at the free end. If the square section of beam is 40mm x 40 mm, find the stress at the failure. **06**

5. a. Deduce a relationship between the shear stress in shaft, shaft geometry, torsion on the shaft, modulus of rigidity, angle of twist and shaft length. Also state the assumptions used in the derivation. **08**

b. i. Determine the maximum deflection and slope of a simply supported beam of length 5m with rectangular cross section of 200 mm wide and 300 mm deep. The UDL is 9 kN/m and Young's modulus of material is 1×10^4 N/mm^2 **06**

ii. A simply supported beam of 6m long, is carrying a point load of 50 kN at its center. The moment of inertia of beam (I) is 75×10^6 mm^4. If E for the material is 210 GPa. Determine the maximum deflection of beam and slope at the supports

OR

6. a. Define and explain the following terms: **08**

i. Modulus of rigidity

ii. Beam deflection

iii. Torsion of shaft

iv. Polar moment of inertia

b. A shaft has to transmit a torque of 30 kNm. The maximum shear stress is not to exceed 100 MPa and the angle of twist is not to exceed 1 degree / meter length. The modulus of rigidity G= 80 GPa. Design the solid circular shaft as per the specification. **06**

7. a. Deduce an equation to determine the normal and shear stress along any plane in the body under a biaxial stress system. **08**

b. Determine the principal planes, principal stresses, maximum shear stresses and corresponding planes for the 2D stressed body as shown in figure 7b using numerical approach **06**

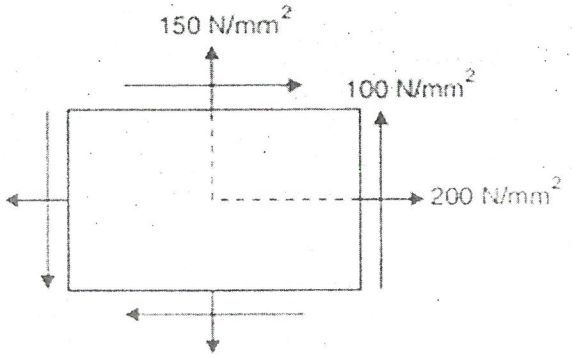

Fig. 7b

OR

8. a. Define the following terms with suitable examples: **08**

i. Principal planes

ii. Plane strain

iii. Plane stress

iv. Mohr's circle

b. Determine the principal planes, principal stresses, maximum shear stresses and corresponding planes for the 2D stressed body as shown in figure 8b using Mohr's circle **06**

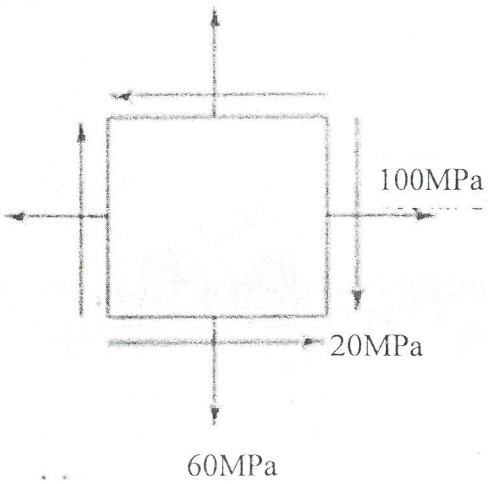

Fig. 8b